HEAT RECOVERY – SP SERIES

Safe Plate (SP) 80-500

Flue gas and process heat

The high-temperature heat recovery units in the Safe Series from **exodraft** recover unused energy from flue gases and process air. The units are designed to operate in flue gas temperatures up to 400°C on air side.

The housing of the Safe Series units consists of stainless steel 1.4404 (internal)and 1.4301 (external) and is protected against radiation losses with a highly effective insulation while a built-in drain ensures disposal of condensation.

The highly efficient plate heat exchangers, which consists of stainless steel (copper brazed joints) is distinguished by its robustness and its efficient heat transmission, courtesy of its unique design.

When no heat is required the hot flue gases or process air are passed through an integrated bypass. This bypass protects the system from overheating and is also activated if heat consumption no longer occurs. Additionally, the bypass prevents critical pressure loss. The **exodraft** heat exchangers have a minimal space requirement due to their compact design.

**Not suitable for solid fuel units (wood, coal, biomass, etc.).*

General specifications

- Handles flue gas temperatures up to 400°C
- Integrated bypass damper protects the system from overheating
- All parts in connection with flue gas made in stainless steel 316 (EN 1.4404)
- All external parts made in stainless steel 304 (EN 1.4301)
- 40 mm insulation
- Maximum pressure water side of heat exchangers 12 bar (190 °C plate temperature)
- Designed for indoor use. Can be used outside if the product is covered / encapsulated
- Possibility for nickel brazed heat exchangers in harsh environments
- 4 drainage tubes to remove condensation
- In conformance with 2006/42/EC
- In conformance with 2014/35/EU

exodraft

Models

Model	Item no.	Description	Approx. burner output [KW]	Natural gas Nominal flow 250°C [m³] λ 1.2	Max. temp [°C]	Inlet (nipple) ø outside [mm]	Outlet (sleeve) ø inside [mm]	Drainage connections size internal tread [“]	Weight incl. heat exchanger [kg]	Weight excl. heat exchanger [kg]
SP80	8001100	Integrated bypass 1x AIREC heat exchanger: Cross30-C-80 Copper brazed Standard connecting pipe dimensions	80	200	400	180.5	181.2	1	58	48
SP120	8001200	Integrated bypass 1x AIREC heat exchanger: Cross30-C-100 Copper brazed Standard connecting pipe dimensions	120	300	400	200.5	201.2	1	90	76
SP250	8001300	Integrated bypass 1x AIREC heat exchanger: Cross30-C-140 Copper brazed Standard connecting pipe dimensions	250	600	400	250.5	251.2	1	92	74
SP375	8001400	Integrated bypass 2x AIREC heat exchanger: Cross30-C-100 Copper brazed Standard connecting pipe dimensions	375	900	400	300.5	301.2	1	144	118
SP500	8001500	Integrated bypass 2x AIREC heat exchanger: Cross30-C-140 Copper brazed Standard connecting pipe dimensions	500	1200	400	350.5	351.2	1	150	116

Heat exchangers

Compatibility	Model	Item no.	Number of heat exchangers	Joint material	Plates	Water connection [“]	Max pressure [bar] 190°C plate temp.	Weight [kg]
For SP80	Cross30-C-80	3200986	1	Copper brazed	79	G 1 1/4	12	11
For SP120	Cross30-C-100	3200987	1	Copper brazed	99	G 1 1/4	12	13
For SP250	Cross30-C-140	3200989	1	Copper brazed	139	G 1 1/4	12	17.5
For SP375	Cross30-C-100	3200987	2	Copper brazed	99	G 1 1/4	12	13
For SP500	Cross30-C-140	3200989	2	Copper brazed	139	G 1 1/4	12	17.5

Accessories

- PT 1000 temperature transmitter

Compatibility	Item no.	Length
SP80	2400279	150 mm
SP120	2400279	150 mm
SP250	2400279	150 mm
SP375	2400278	300 mm
SP500	2400278	300 mm

- Silicon hose ø 8/4 mm **(2000335)**
- Pressure connector ø 8/4 mm for hose **(2400266)**
- Cover plate for single **(2400068)**
- Cover plate for double **(2400067)**
- Auxiliary switch unit for damper motors **(3200984)**

exodraft

Dimensions

Front view | Side view | Top view

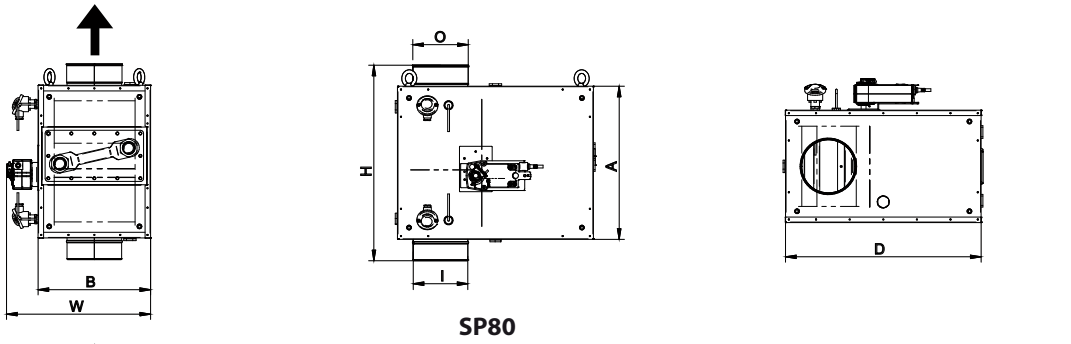

SP80

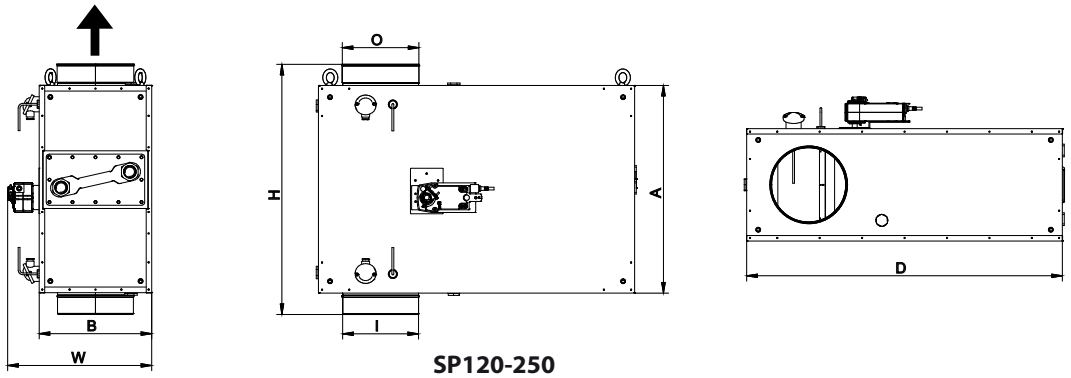

SP120-250

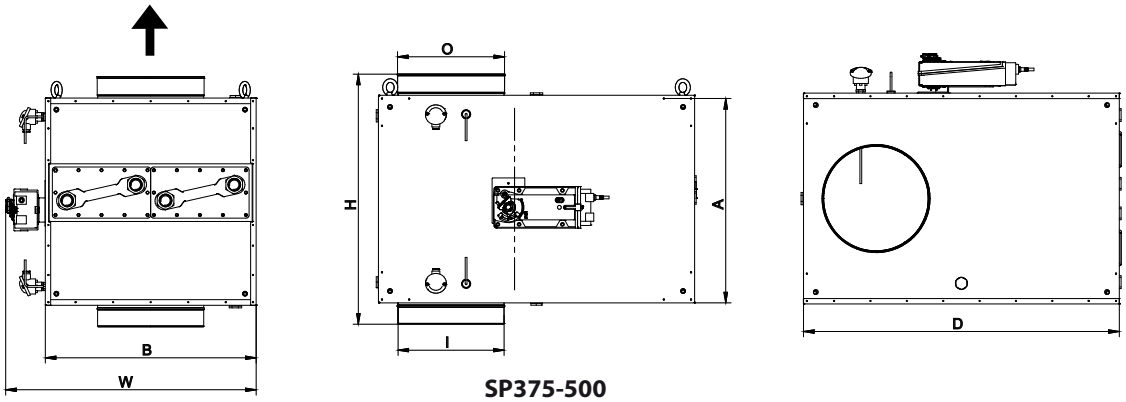

SP375-500

Model/Dimension	W	H	D	A	B	I *	O *
SP80	480.6 mm	646.1 mm	647.2 mm	505.8 mm	371.4 mm	180.5 mm	181.2 mm
SP120	480.6 mm	826.1 mm	1044.2 mm	685.8 mm	371.4 mm	200.5 mm	201.2 mm
SP250	480.6 mm	826.1 mm	1044.2 mm	685.8 mm	371.4 mm	250.5 mm	251.2 mm
SP375	832.1 mm	826.1 mm	1044.2 mm	685.8 mm	696.4 mm	300.5 mm	301.2 mm
SP500	832.1 mm	826.1 mm	1044.2 mm	685.8 mm	696.4 mm	350.5 mm	351.2 mm

* I = Inlet with nipple coupling (outer measure)
O = Outlet with sleeve coupling (inner measure)

exodraft

Damper motors

Compatibility	Model	Item no.	Nomial voltage	Max power consumption [W]	Standby power consumption [W]	Cable size
For SP80	NFA 10 Nm	3201081	AC 24 ... 240 V, 50/60 Hz / DC 24 ... 125 V	6	2.5	3 x 0.75¤ (9.5 VA)
For SP120	SFA 20 Nm	3201080	AC 24 ... 240 V, 50/60 Hz / DC 24 ... 125 V	7	3.5	3 x 0.75¤ (18 VA)
For SP250	SFA 20 Nm	3201080	AC 24 ... 240 V, 50/60 Hz / DC 24 ... 125 V	7	3.5	3 x 0.75¤ (18 VA)
For SP375	EF230A - 30 Nm	3201064	AC 230 V, 50/60 Hz	9	4.5	3 x 0.75¤ (21 VA)
For SP500	EF230A - 30 Nm	3201064	AC 230 V, 50/60 Hz	9	4.5	3 x 0.75¤ (21 VA)

Drain positions

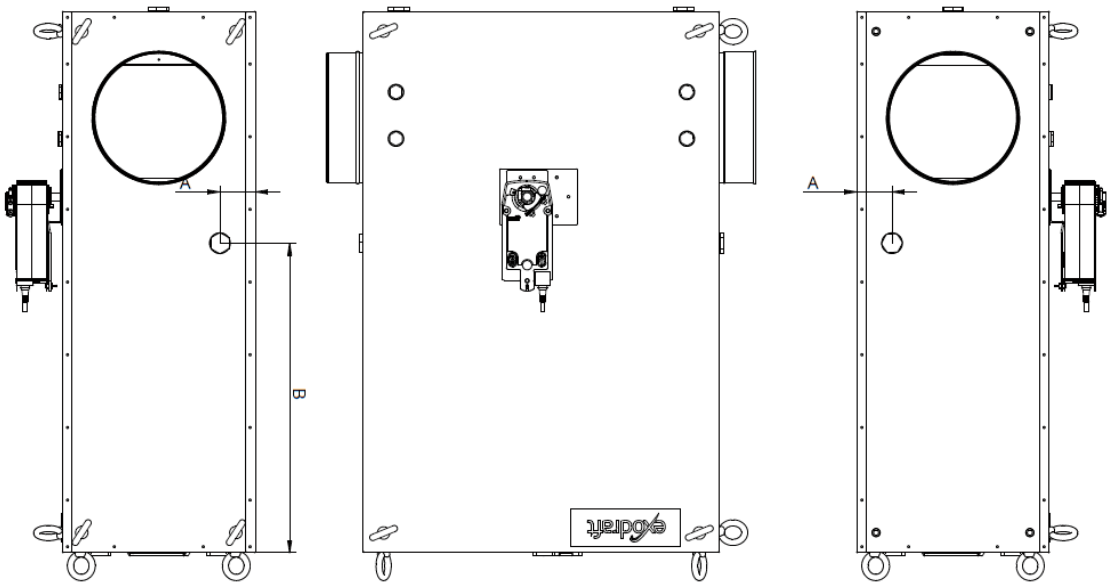

Model	A	B	C
SP80	68 mm	324 mm	186 mm
SP120	68 mm	597 mm	186 mm
SP250	68 mm	597 mm	186 mm
SP375	68 mm	522 mm	348 mm
SP500	68 mm	522 mm	348 mm

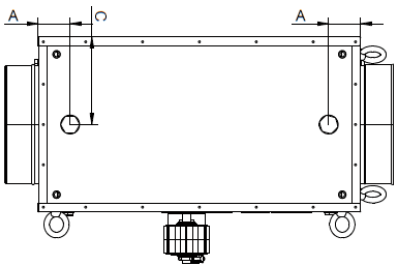

Spare parts

- Heat exchanger gasket **(2400282)**

Heat exchangers (copper brazed)

- Cross30-C-80 **(3200986)**
- Cross30-C-100 **(3200987)**
- Cross30-C-140 **(3200989)**

Heat exchangers (nickel brazed)

- Cross30-N-80 **(3200991)**
- Cross30-N-100 **(3201052)**
- Cross30-N-140 **(3200880)**

Damper motors

- Damper motor NFA 10 Nm **(3201081)**
- Damper motor SFA 20 Nm **(3201080)**
- Damper motor EF230A 30 Nm **(3201064)**